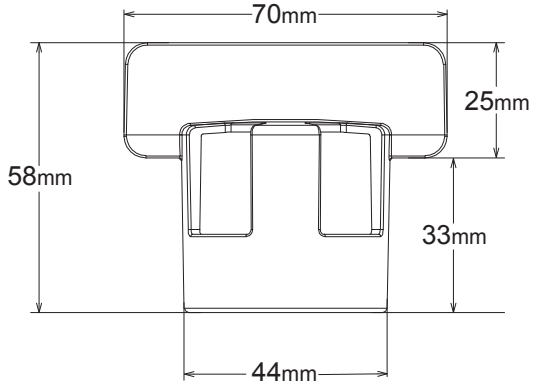

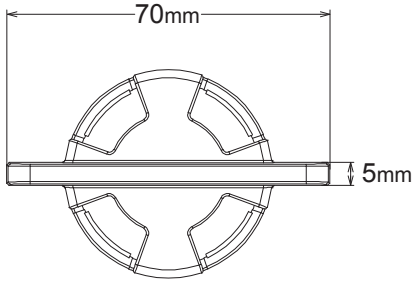

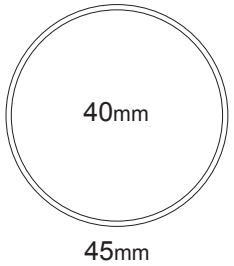

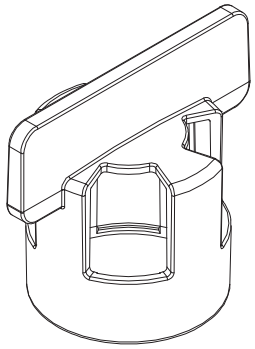

20220926_RMA_2DD_PK