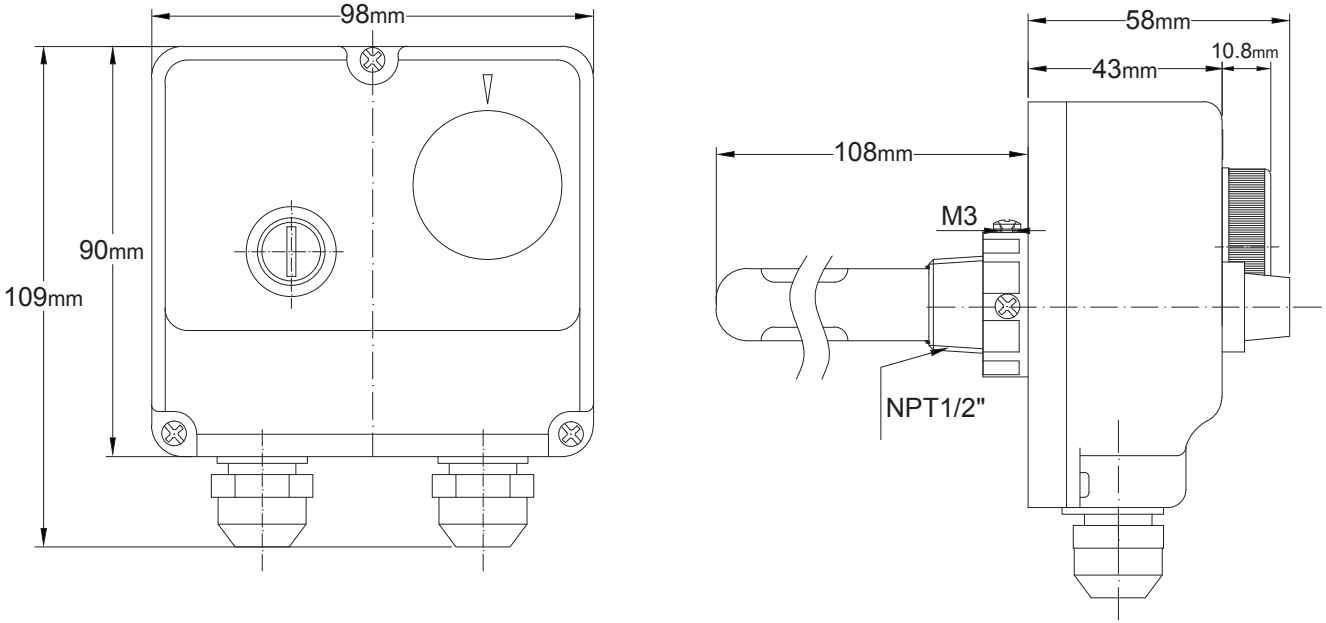

20220923_DBS_2DD_PK