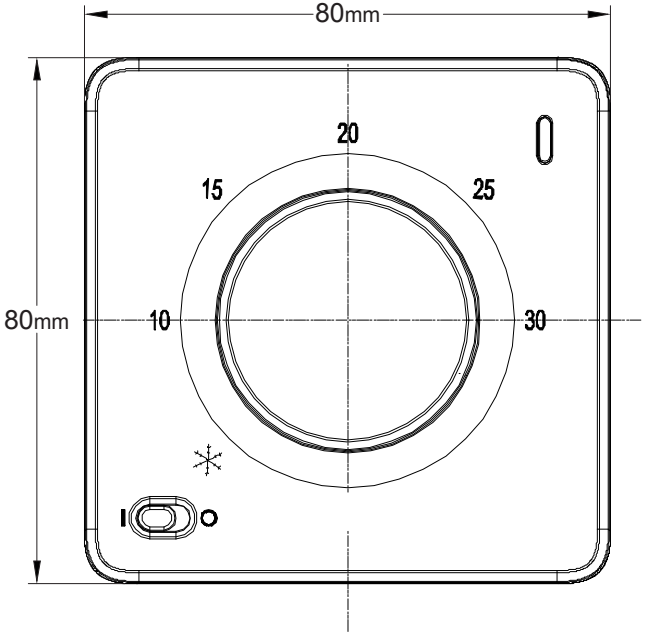

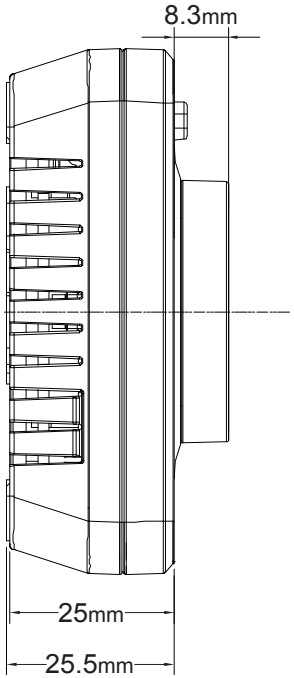

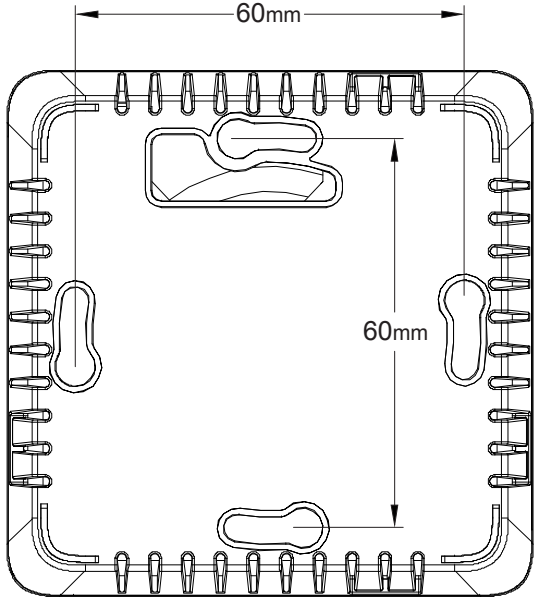

20220927_CM3S_2DD_PK