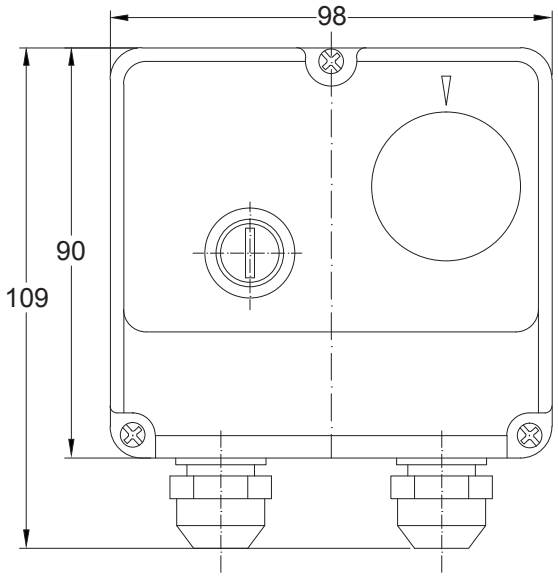

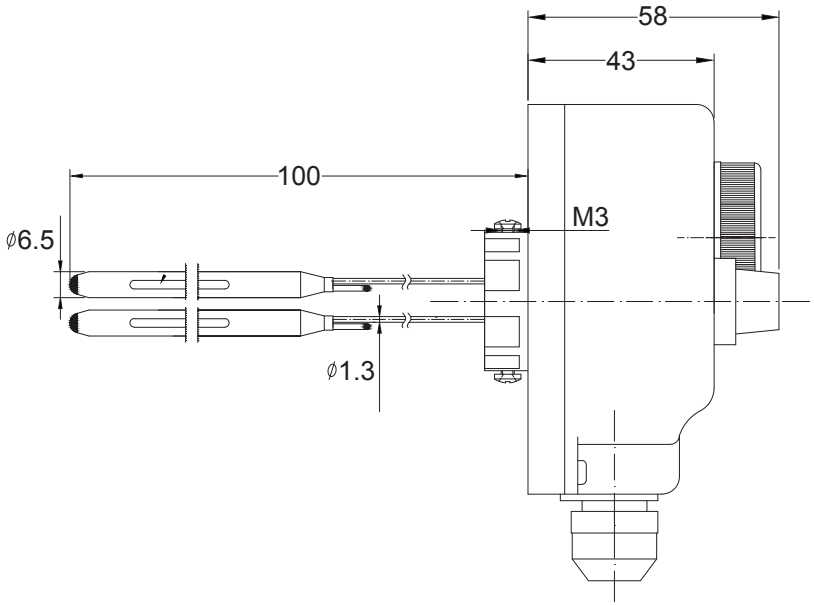

20220923_DBS-P_2DD_PK