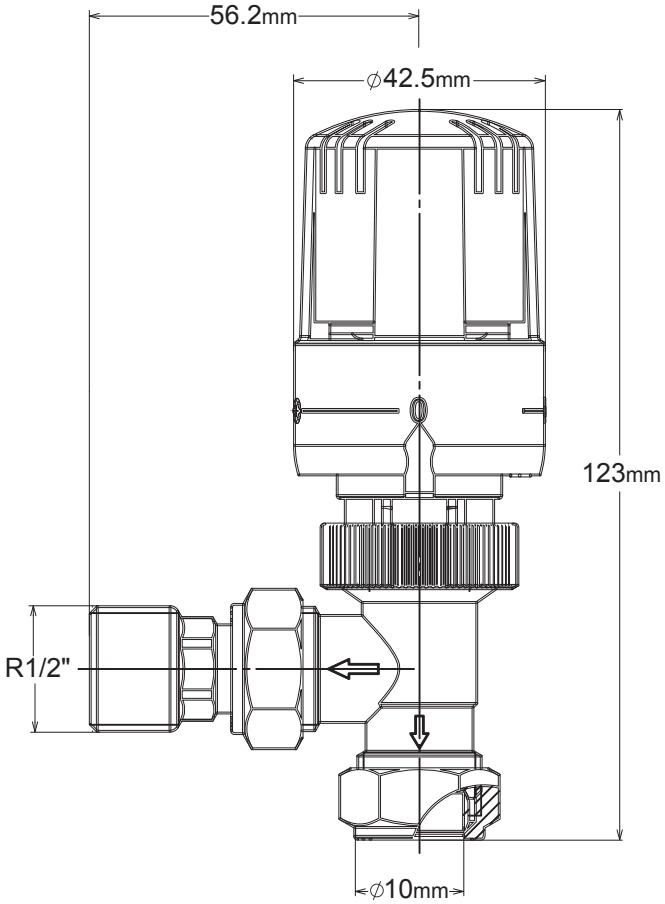

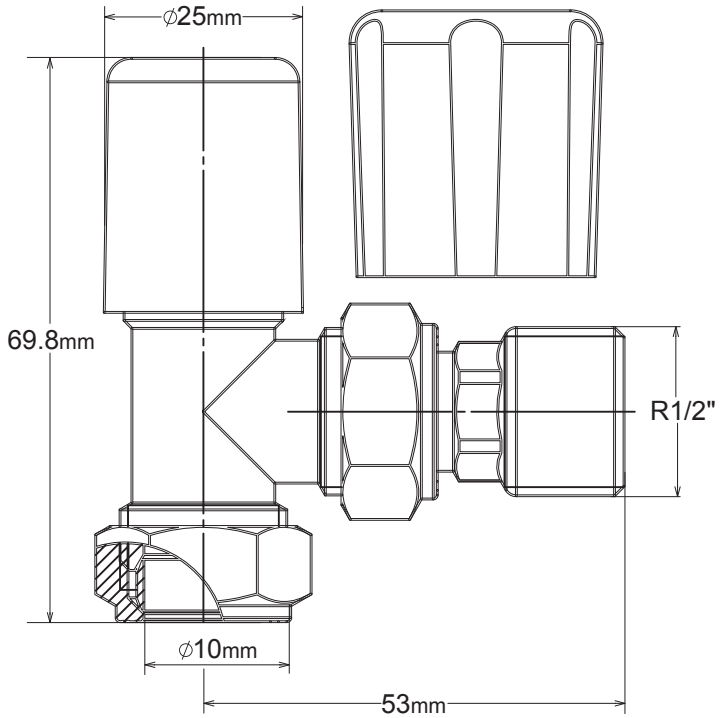

20220923_EMTRV10_2DD_PK