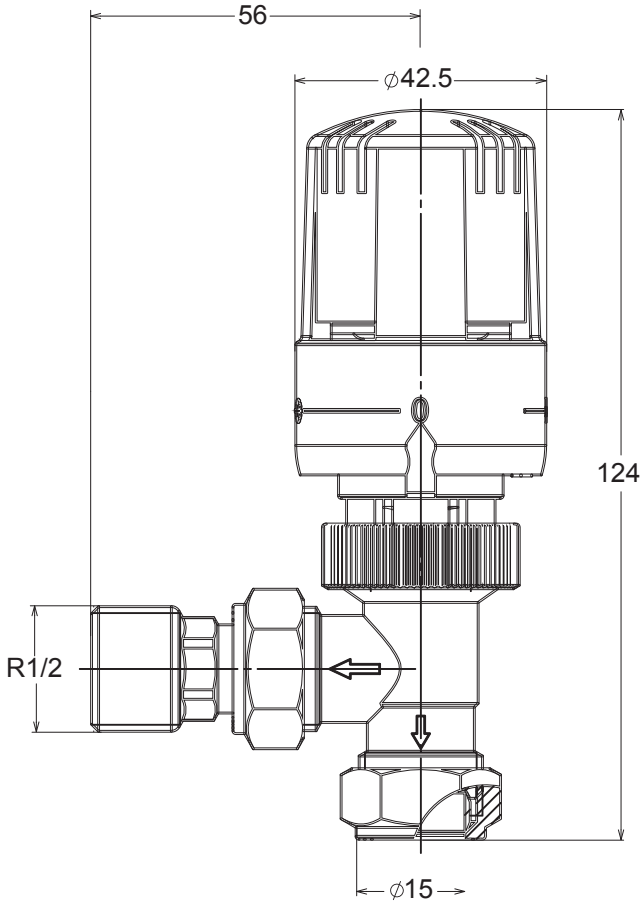

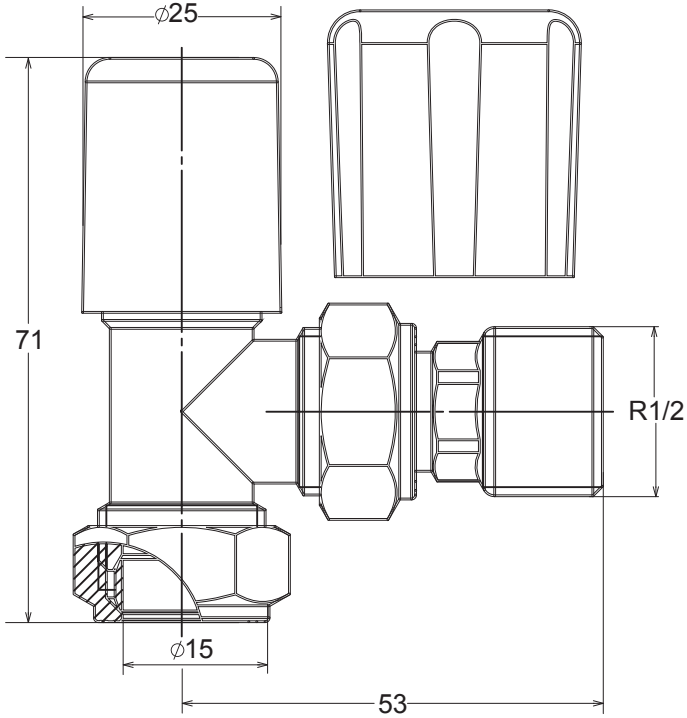

20220923_EMTRV15_2DD_PK