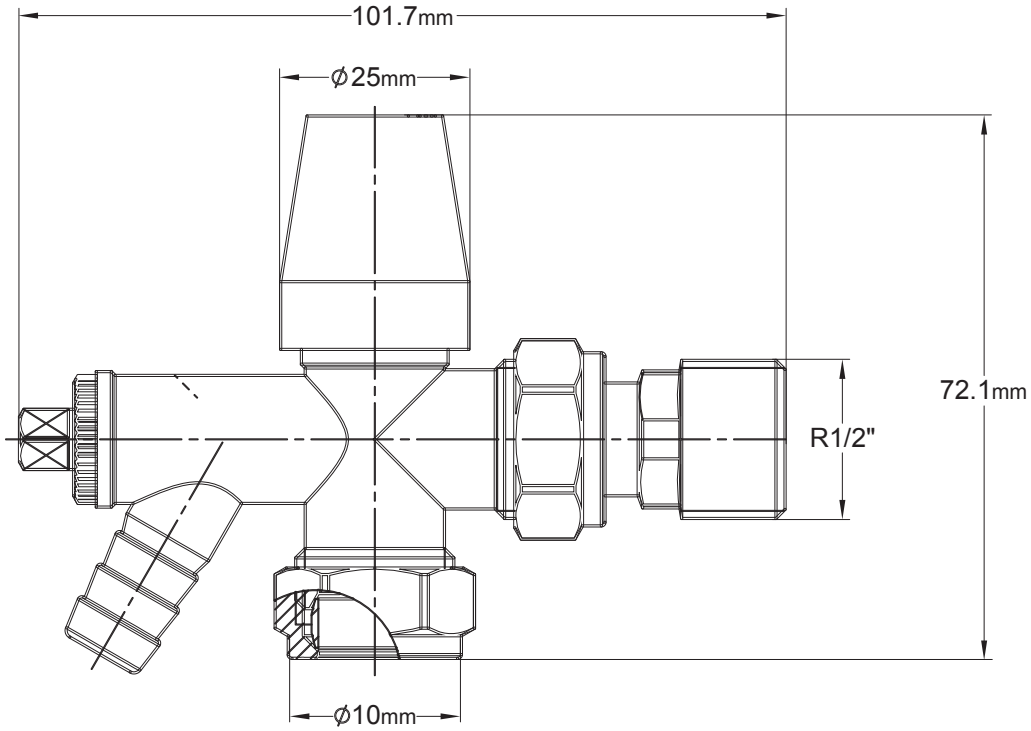

20220923_LSDOV10_2DD_PK