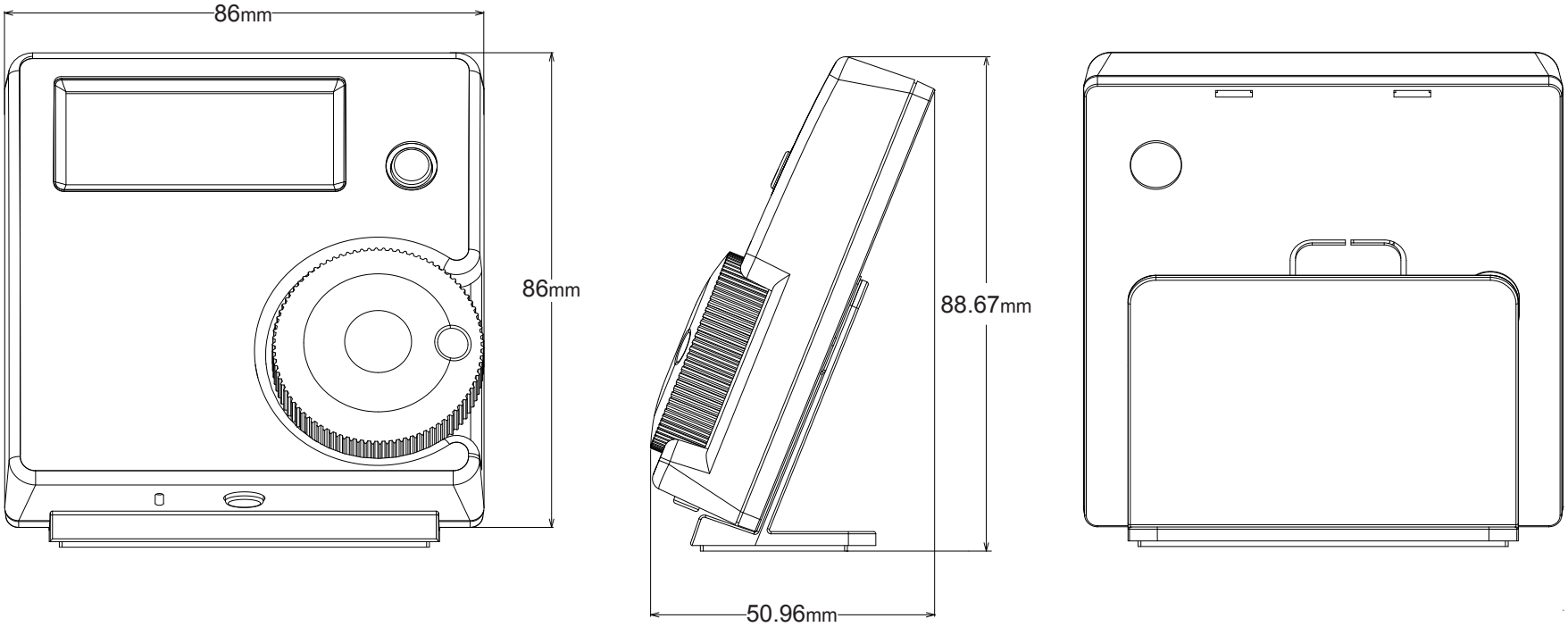

20220926_RFRA_2DD_PK