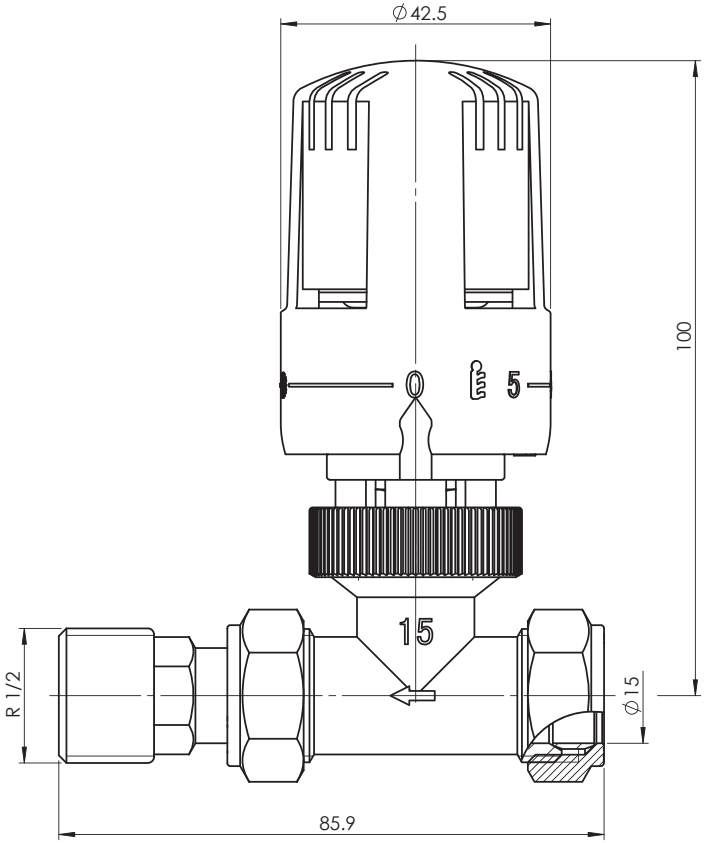

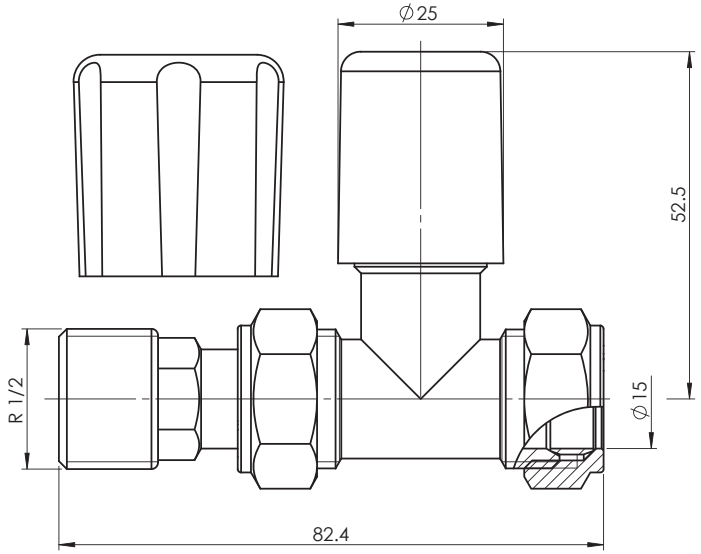

20170626_SEMTRV_2DD_JW