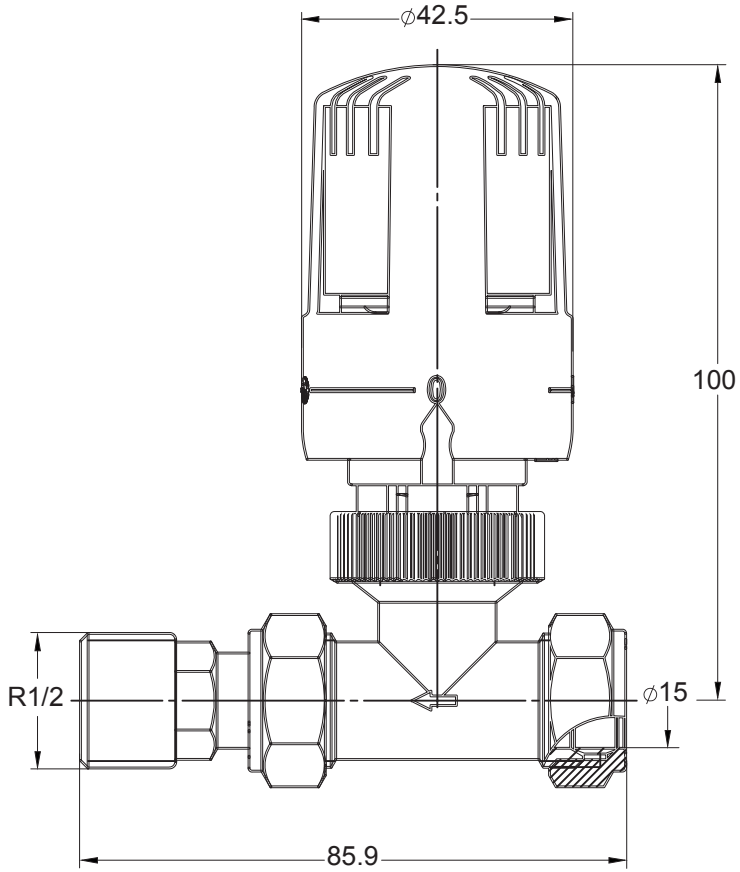

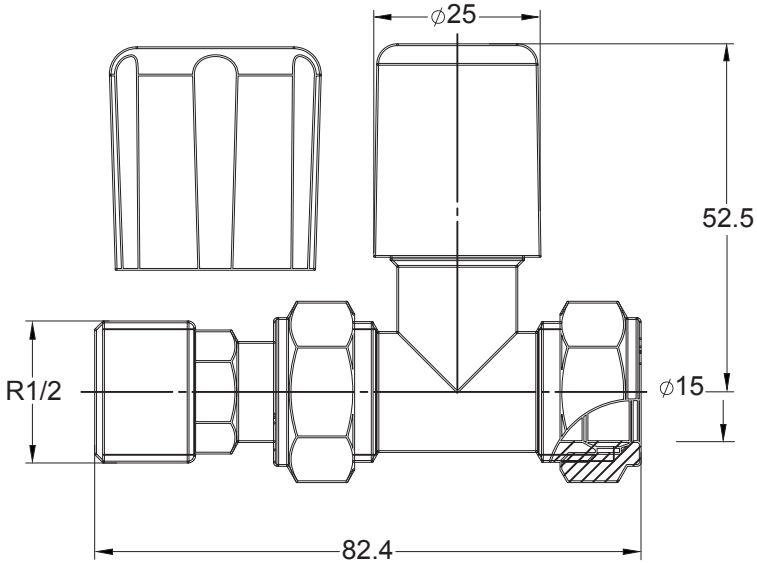

20220927_SEMTRV_2DD_PK