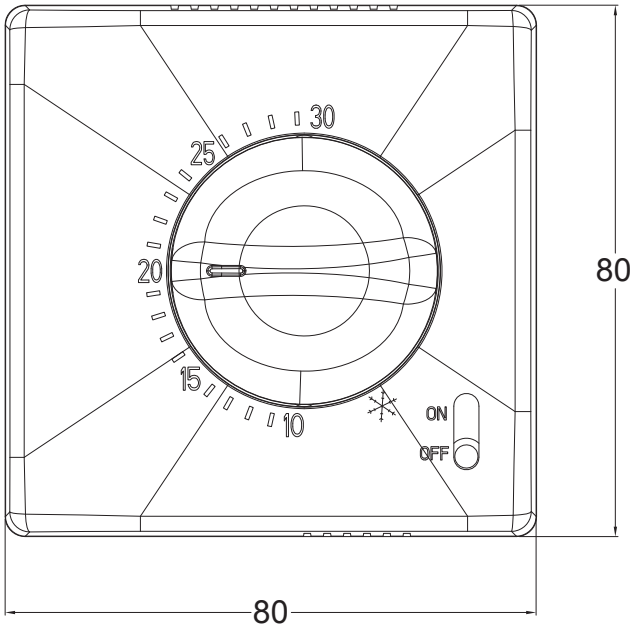


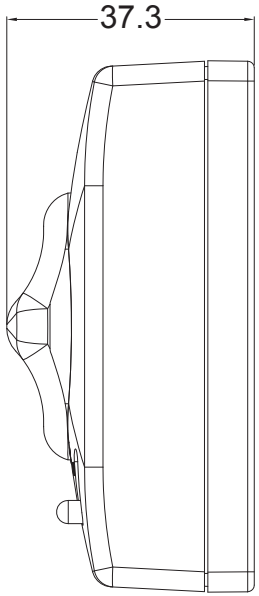


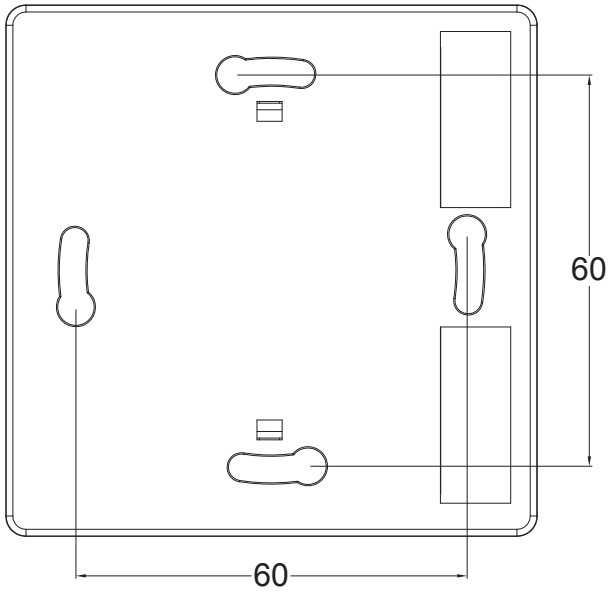


20221101_CM3S/TM3S_2DD_PK