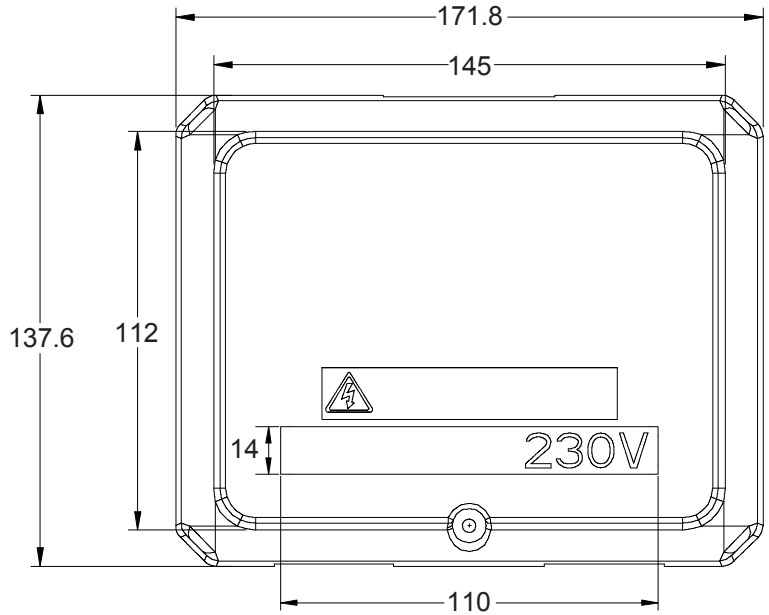


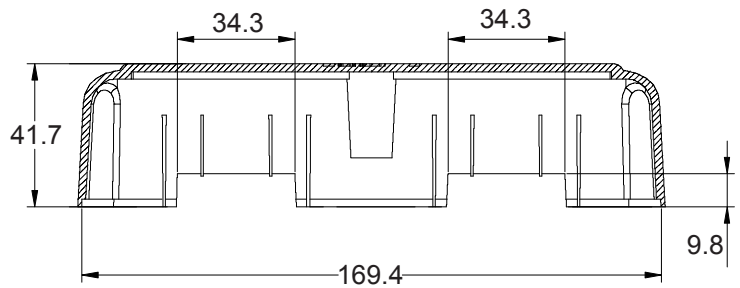


20220928_WC3_2DD_PK

Product Code: WC3