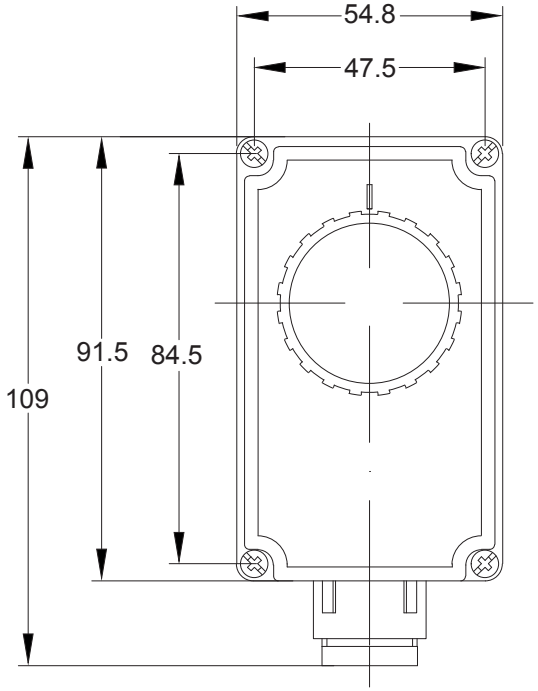

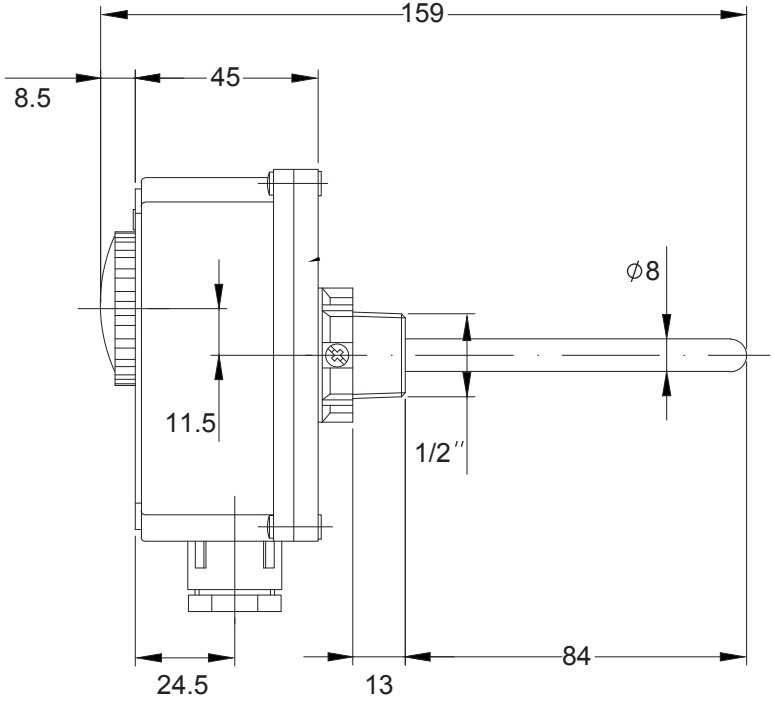

20220928_WRP-IM_2DD_PK