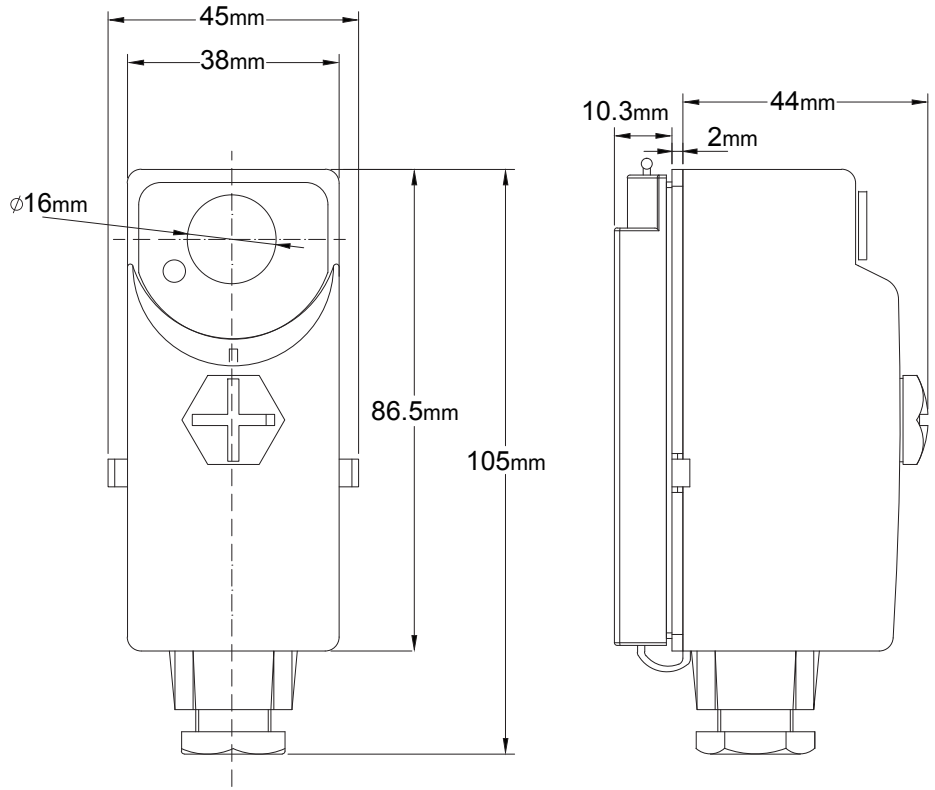

20220914_WRP-TP_2DD_PK

Product Code: WRP-TP