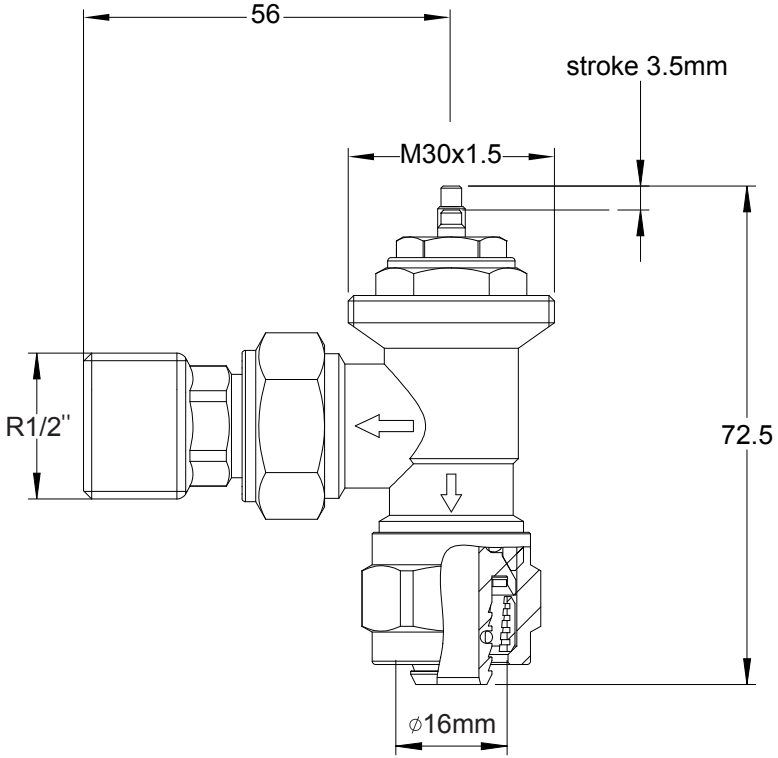

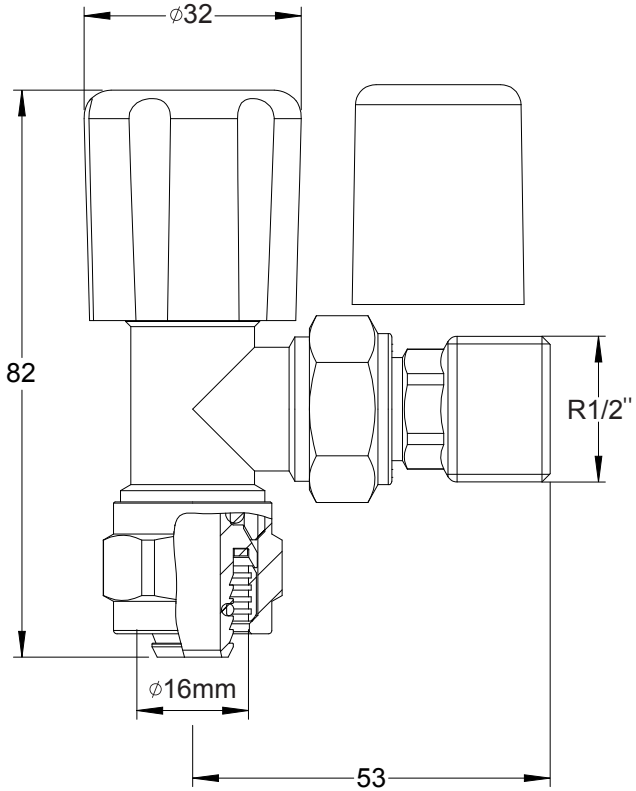

20221109_EMTRVMLP_2DD_PK