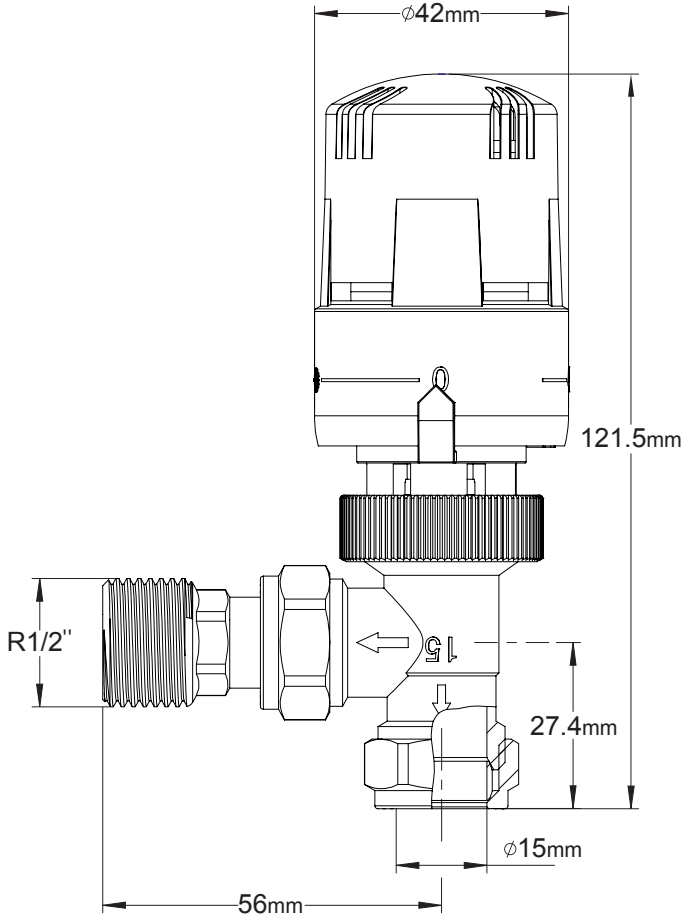

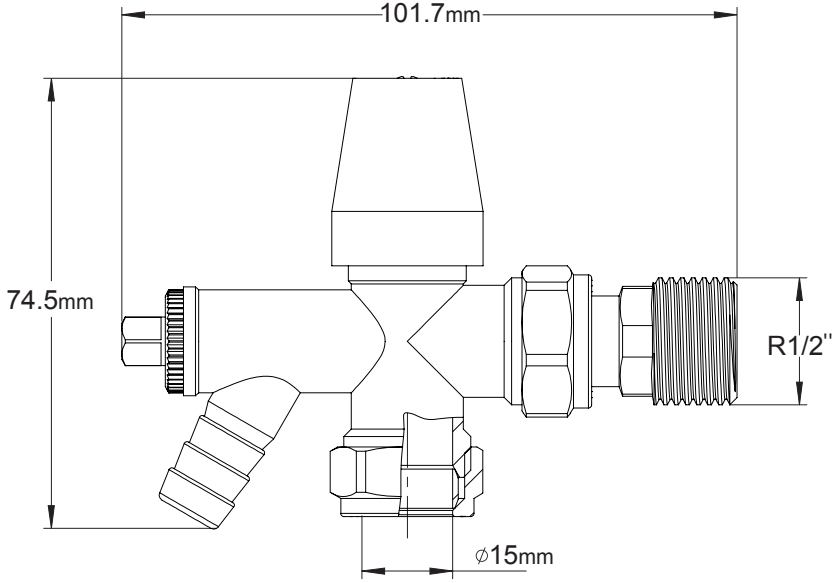

20221024_EMTRV15DOV_2DD_PK