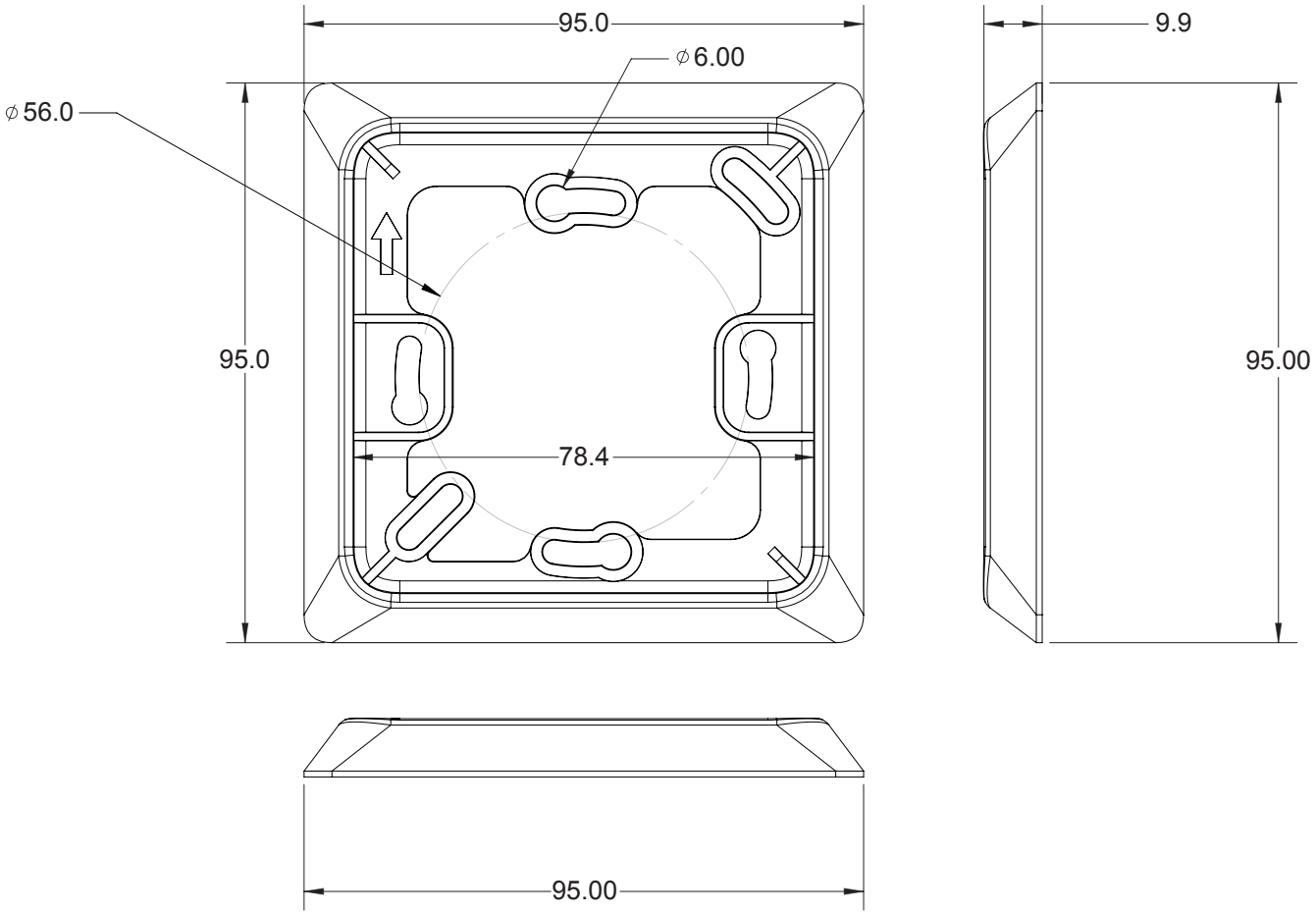

20221024_SMB_2DD_PK

Product Code: SMB