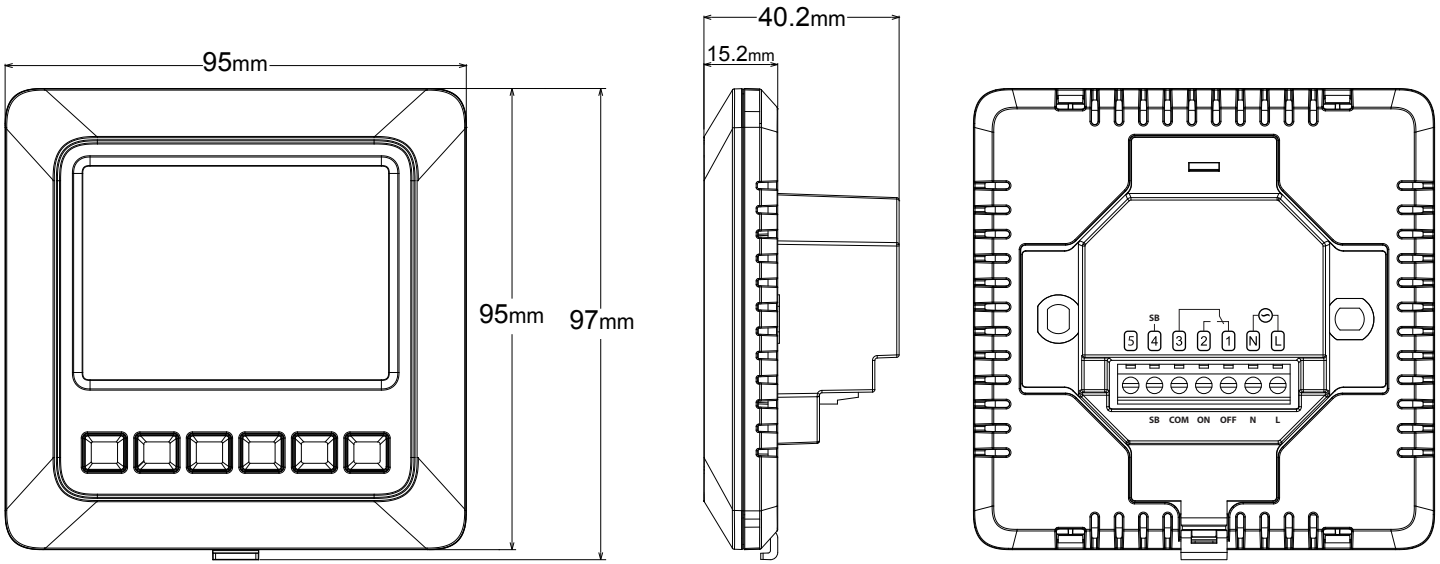

20220914_RDTP_2DD_PK

Product Code: RDTP