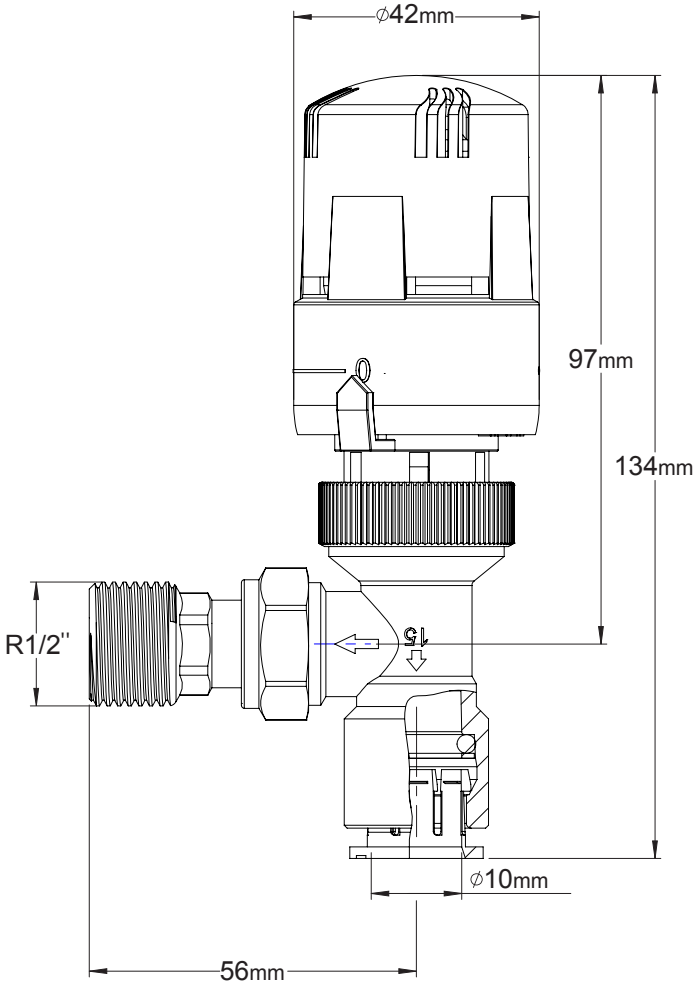

20221024_CTRV10PF_2DD_PK

Product Code: CTRV10PF