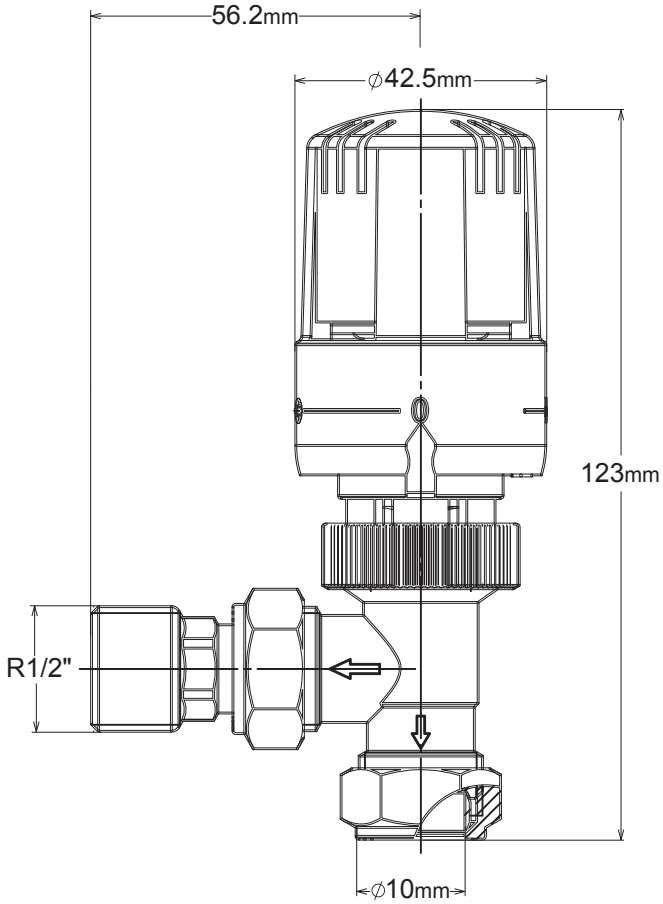

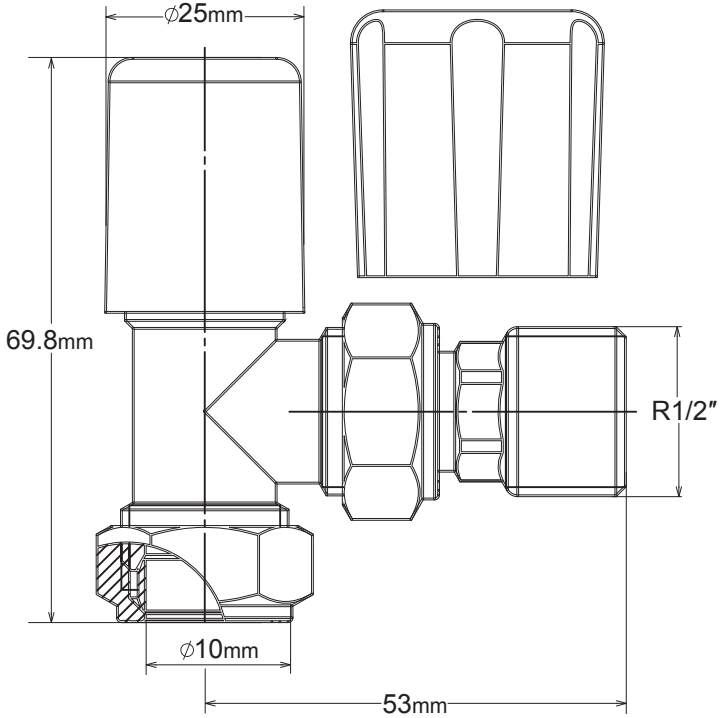

20220923_EMTRV10PF_2DD_PK