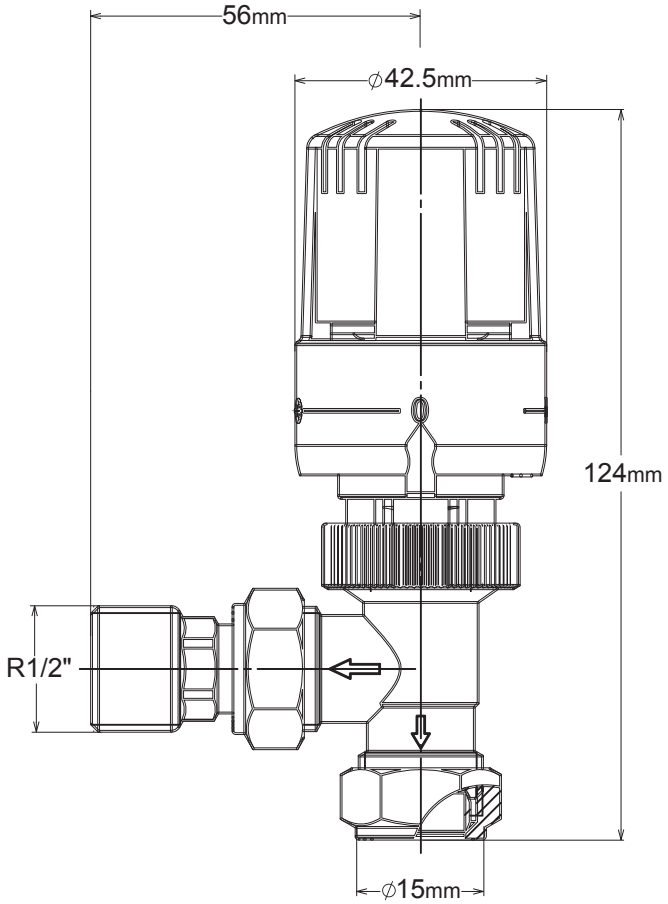

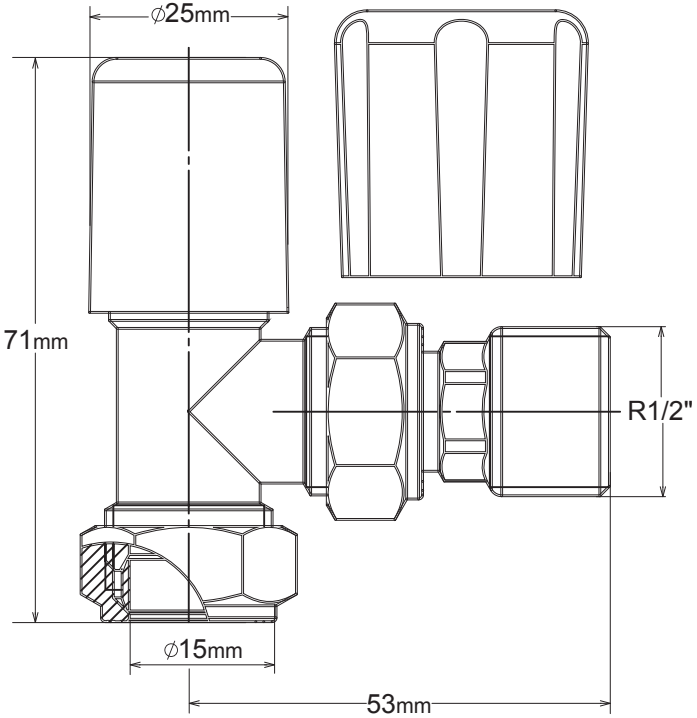

20220923_EMTRV15PF_2DD_PK