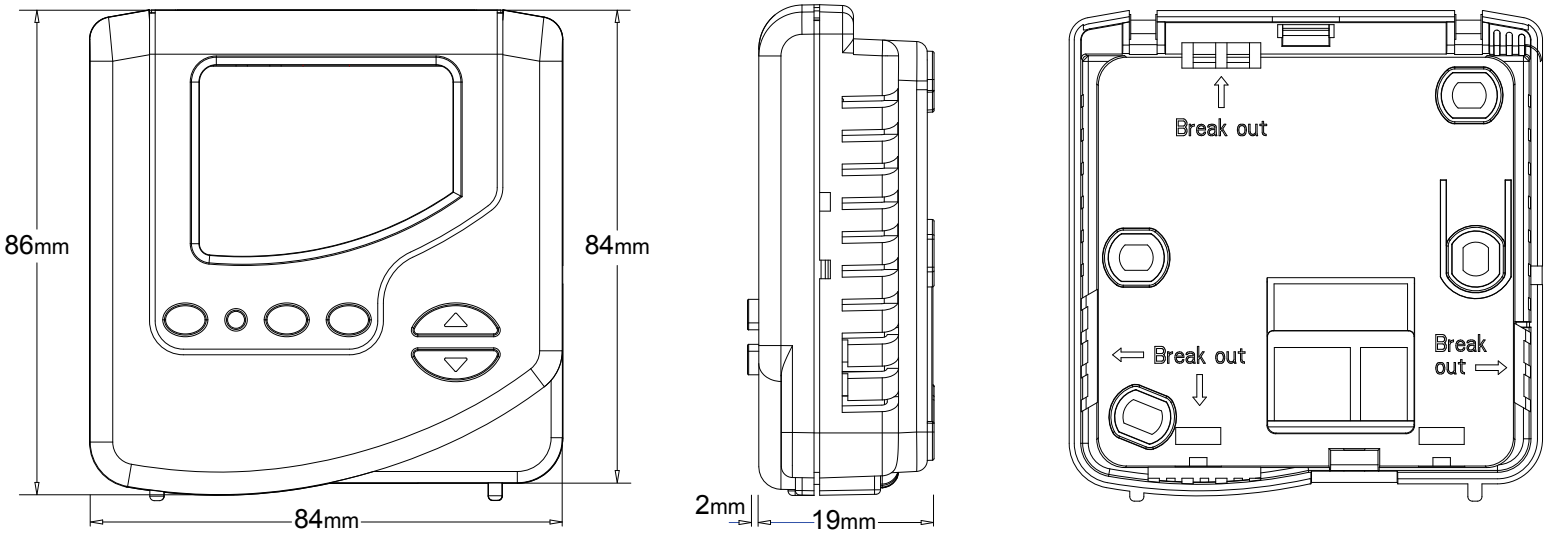

2023-02-03_CDTP2 (Pre2023)_2DD_PK