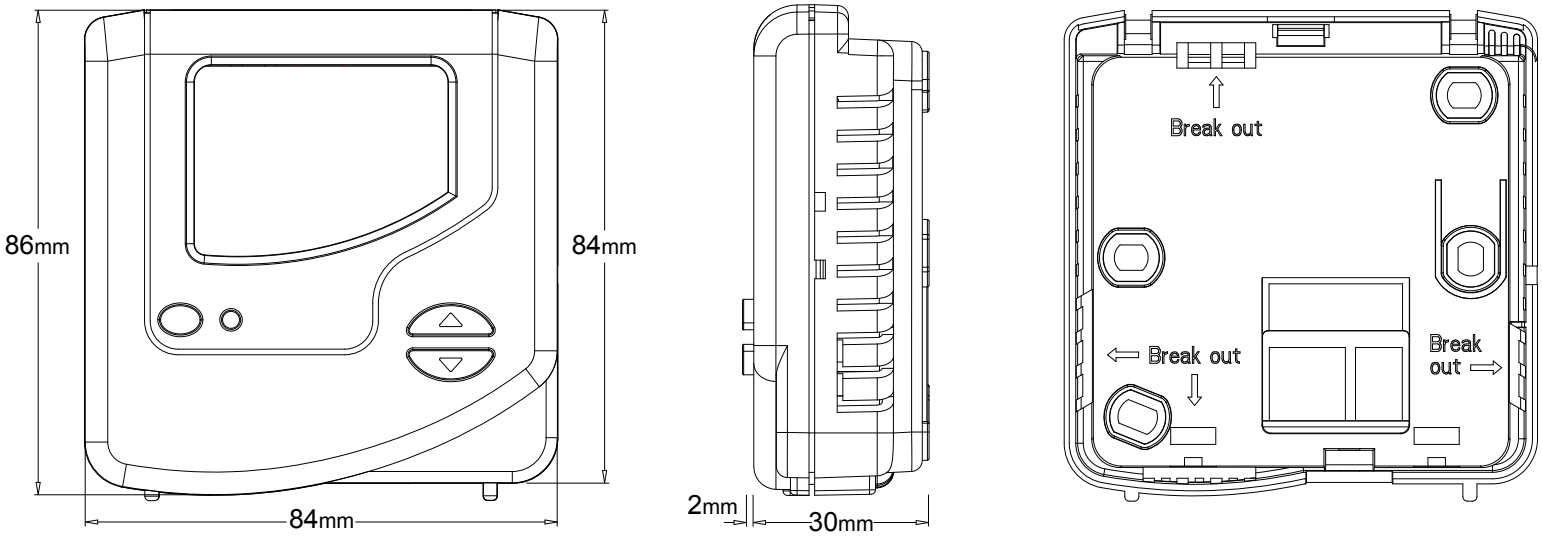

2023-02-03_CRT2(Pre2023)_2DD_PK

Product Code: CRT2 (Pre 2023)